26 November 2021

Gas Starter Log Lighters

Gas Log Lighters for Wood Fires

Installation and Operational Instructions

1. FOR WARMINGTON SI / SN SERIES FIRES:

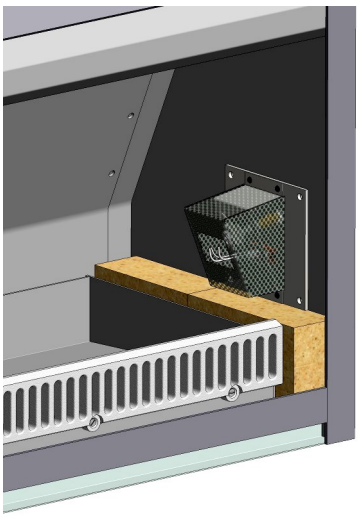

1A: SI/SN FLARE

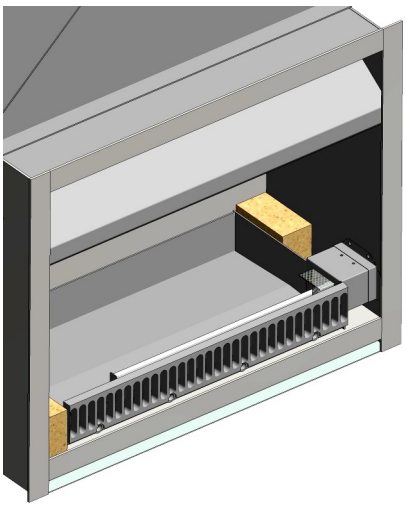

1B: SI/SN RAIL BURNER

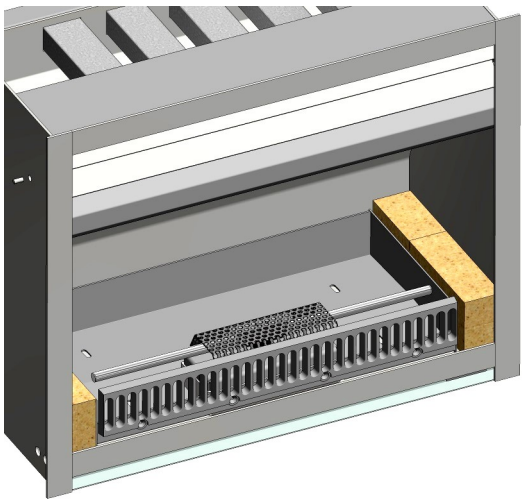

1C: SI/SN TEE BAR RAIL BURNER

2. FOR WARMINGTON TF SERIES FIRES:

2A: TF FLARE

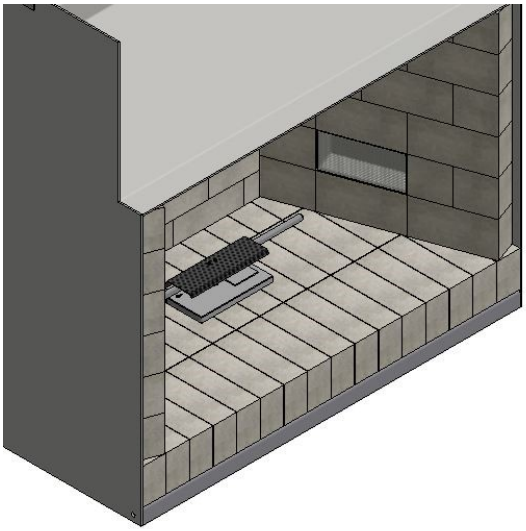

2B: TF TEE BAR RAIL BURNER

Warmington gas log lighters are constructed and tested to comply with NZS 4558(int):2013 "Decorative gas log and other fuel effect appliances".

Keep these instructions for further reference. Ensure that you have the correct and current installation details.

IMPORTANT

Read all the instructions carefully before commencing the installation. Failure to follow these instructions may result in a fire hazard and void the warranty.

Due to continued product improvement, Warmington Ind LTD reserves the right to change product specifications without prior notification.

All dimensions are in mm

COMPONENTS REQUIRED FOR INSTALLATION

Supplied	No:
Burner Head (only one type is supplied) 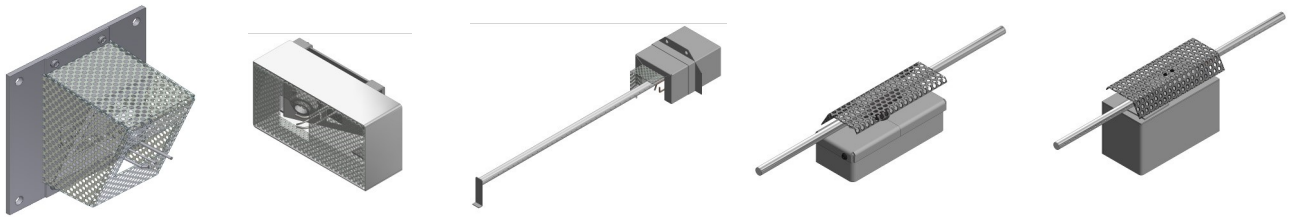	1
Control box 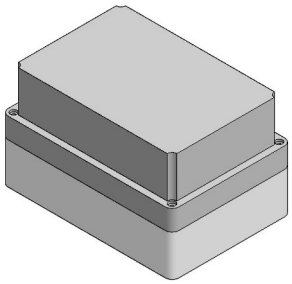	1
SIT 840 Control Valve 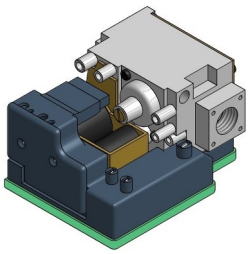	1
Omron H3DK-M1 Timer 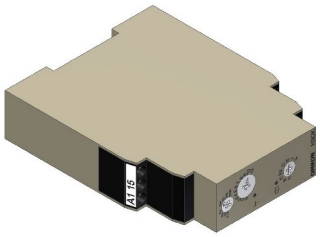	1

NOT Supplied	No:
Switch plate 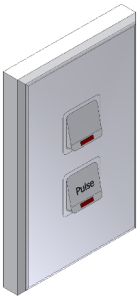	1

Due to continued product improvement, Warmington Ind LTD reserves the right to change product specifications without prior notification.

All dimensions are in mm

GENERAL INFORMATION

Gas log lighters are to be used in Warmington wood fires for automatic lighting of wood logs. There are three different options to choose from. The 'flare' blasts flames (and heat) onto the wood from one side, while the 'rail burner' and 'tee bar rail burner' blast heat and flames across the central opening of the fireplace (either from the front or the back). It should be noted that the flare design is the most robust, however the rail burner designs can be installed to suit aesthetic considerations.

Log lighters can be installed into Warmington's indoor SI series fires, outdoor Nouveau SN series, and traditional TF series wood fires. Due to significant differences in the design of these fireboxes, log lighter designs also vary across the series (with the exception of the rail burner). Please ensure correct specification of the appropriate log lighter before purchase. Contact your local Warmington retailer for assistance if required.

TO THE CUSTOMER/ HOME OWNER

Your Warmington gas appliance operates on the principle of a fire. Therefore it is important to observe the following precautions associated with any heating appliance or open fire.

- The fire is not intended for the drying of clothing, bedding etc.
- Avoid installing this appliance near strong draughts, or near drapes/ curtains or furniture
- The use of an appropriate fireguard is recommended for the protection of young children

SAFETY

- Always use a registered gas fitter for installation and maintenance work of gas components
- Always use a registered electrician for installation and maintenance work of electrical components
- If using cylinder based gas supply, always use certified gas cylinders that have been tested and are safe to use
- Never modify your gas appliance or its settings from those specified by the manufacturer

OPERATION OF WARMINGTON GAS LOG LIGHTER

To light:

- Ensure the unit is free of obstruction and any flammable material.
- Switch on main power switch (supplied by electrician).
- Depress the pulse switch (supplied by electrician). After a few seconds, the high frequency spark electrode will operate. At the same time the gas solenoid valve will open allowing the gas to flow to the burner. If the unit does not light it will automatically shut down. Depress the pulse switch again if log lighter does not light initially.
- When the unit lights it will run for approx. 10mins until the logs burn by themselves. The log lighter will then shut down (unless the timer is set differently).

To shut down:

The unit will automatically shut down in approximately 10mins. The unit is then in a stand by state, ready for restart by activating the pulse switch.

The main power switch can be switched off to ensure that there is no accidental operation of the unit.
If the unit is required to be shut down before the unit has timed out then the main power switch can be turned off- the unit will stop and will be electrically isolated.

WHAT TO DO IF YOU SMELL GAS

- Open windows and doors
- Do not light any gas appliance
- Do not use any electrical appliance or switches
- Do not use the telephone in your home
- Leave the building. Shut off the domestic gas supply valve (beside your meter)
- Call your gas supplier/gas fitter or the fire service for further advice

Due to continued product improvement, Warmington Ind LTD reserves the right to change product specifications without prior notification.

All dimensions are in mm

INSTALLATION

Important Notes:

- Install to manufacturer's specifications
- All new installations require a permit
- Allow for gas supply to control box, ensuring control box is clear at least 0.5 metres from the heating appliance
- Allow for electrical 5 core wiring to wall switch, also from switch to main control panel unit. Consult a certified electrician for installation of wiring.
- Control box, wiring and valve must be placed in a dry and moisture free environment because of the electronics.
- Ensure when finishing that the control box is accessible for maintenance.
- Ensure that wiring and burner head is installed in a moisture free environment and sheltered from the environment when not in use.

STAGE 1: INSTALLATION OF BURNER HEAD

- Prepare firebox for fitment of the burner head. If the firebox has been specified including the log lighter, much of the firebox preparation work will be done in the Warmington factory. If retrofitting into an existing fire, follow these instructions.
- Even if the unit comes with the firebox the heatshield has to be prepared for the gas feed and spark/rectifier wires. It is important, especially for the flare, that the cut is large enough so that there is no danger of damaging the wires or having the spark jump to the heatshield edges.
- Install the burner head according to the appropriate section of this document for fire type and log lighter type.

OPTION 1A: SI/SN FLARE

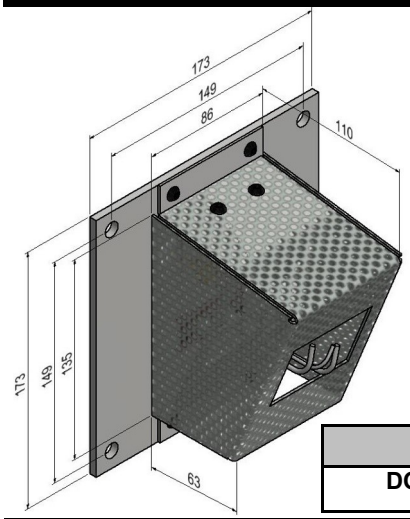

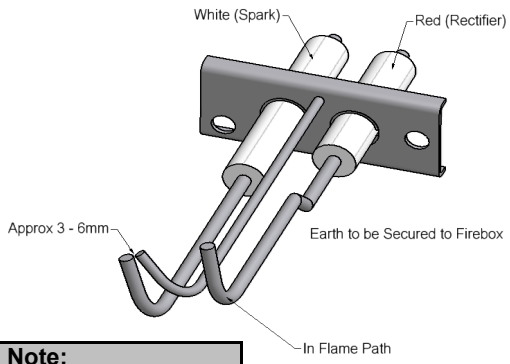

Note:
DO NOT extend HT leads

Notes:
There is a left hand and right hand version of the SI/SN flare. Please ensure the correct version is on site before installing*.
If retrofitting, the firebox may need to be removed from the cavity to achieve the installation.

Important Note:

* If installing in a SI 780 or smaller and the flare is to be installed on the left side a right hand (RH) have to be ordered. It also has to be installed turned 90 degrees so the flare flame faces in-wards as shown in the photo:

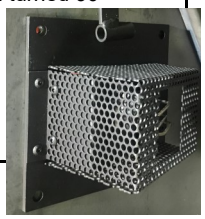

PREPARATION AND INSTALLATION

- If retrofitting, cut holes in firebox side as per appropriate drawing. Otherwise holes will be pre cut by Warmington factory.

SI FIREBOX CUT PATTERN

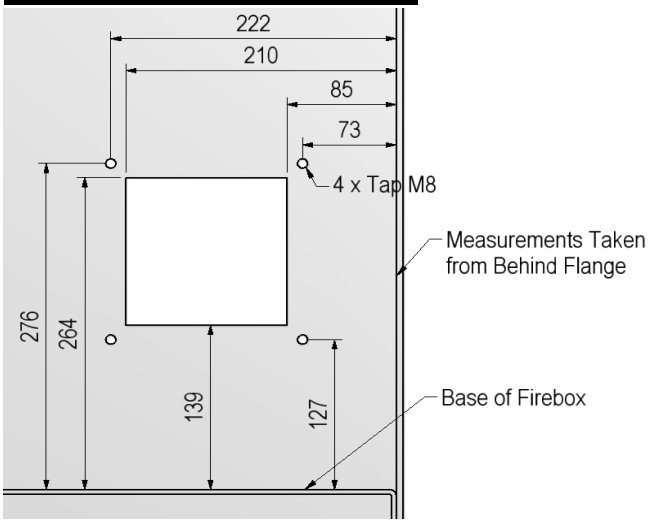

SN FIREBOX CUT PATTERN

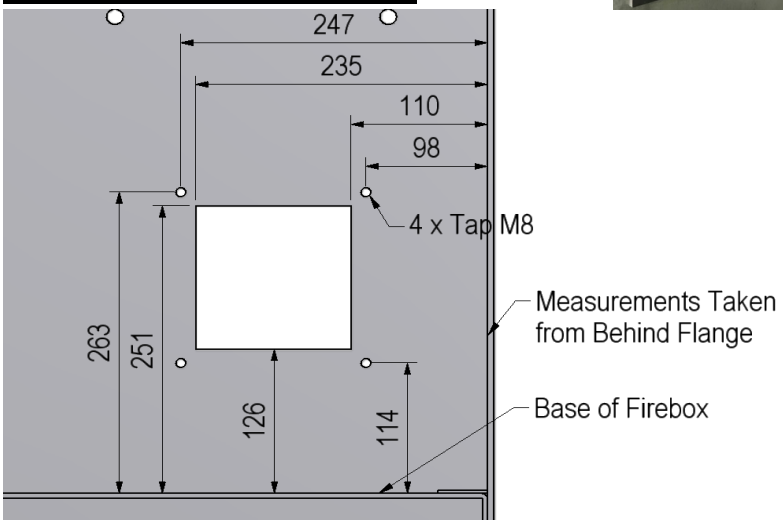

- Bolt flare plate into firebox side using supplied M5 bolts to install

Due to continued product improvement, Warmington Ind LTD reserves the right to change product specifications without prior notification.

All dimensions are in mm

OPTION 2A: TF FLARE

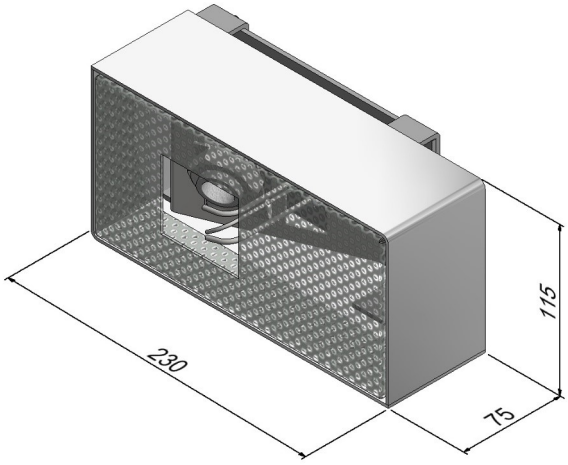

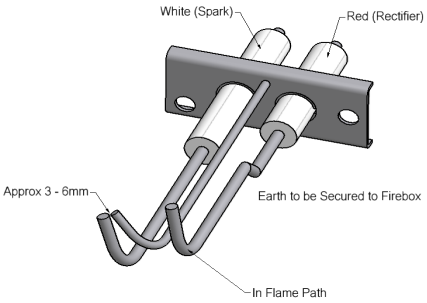

Notes:
The TF flare replaces the appropriate Caitec air brick in the side of a TF fire.
There is a left hand and right hand version of the TF flare. Please ensure the correct version is on site before installing.

Note:
DO NOT extend HT leads

PREPARATION AND INSTALLATION

- If installing into a new Warmington traditional fire, see section 2 of the TF firebox specification document. The TF flare installation should replace the installation of one the Caitec air bricks as referenced in TF firebox specifications section 2.2. Cut holes for gas/ electrical feeds as per section 2.3. Remember to install service box as per section 2.4.
- Note: retrofitting a TF flare into an existing traditional fire is **not** recommended

OPTION B: SI/ SN RAIL BURNER

There are two sizes of rail burner. Please ensure the correct size is on site before installing.

Firebox size	SI 780	SI 900	SI 1100	SI 1250	SI 1500	SI 2000
Rail burner size	600	600	800	800	800	800
Firebox size	**SN 900**	**SN 1100**	**SN 1250**	**SN 1500**	**SN 1800**	**SN 2000**
Rail burner size	600	800	800	800	800	800

Note: Rail burners cannot be installed into SI fires smaller than 780 or SN fires smaller than 900

Notes:
There is a left hand and right hand version of the rail burner. Please ensure the correct version is on site before installing.
If retrofitting, the firebox may need to be removed from the cavity to achieve the installation.

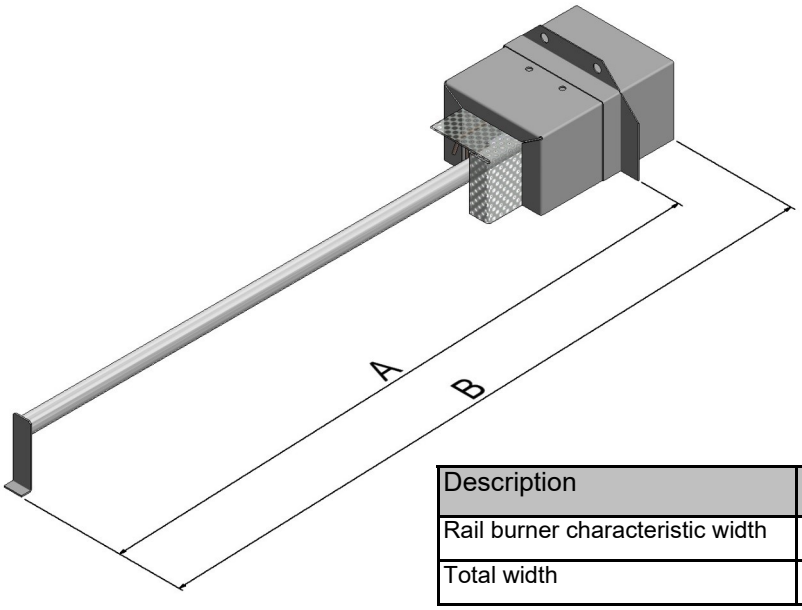

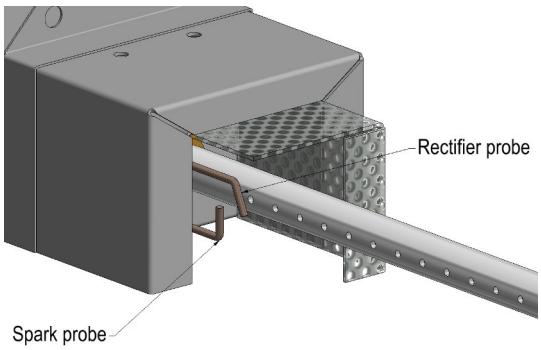

Description		600 Rail Burner (LH/RH)	800 Rail Burner (LH/RH)
Rail burner characteristic width	**A**	620	820
Total width	**B**	700	900

Due to continued product improvement, Warmington Ind LTD reserves the right to change product specifications without prior notification.

All dimensions are in mm

PREPARATION AND INSTALLATION FOR RETROFITTING

For installing into Warmington SI and SN fires:

- For new installations, rail burner head will come pre-mounted. Route gas and electrical feeds as appropriate.
- For retrofitting, cut holes in firebox and ash pan as per appropriate drawings.
- Lastly bolt the leg of the rail-burner to the ash pan through the hole that on the foot at the end of the rail-burner.

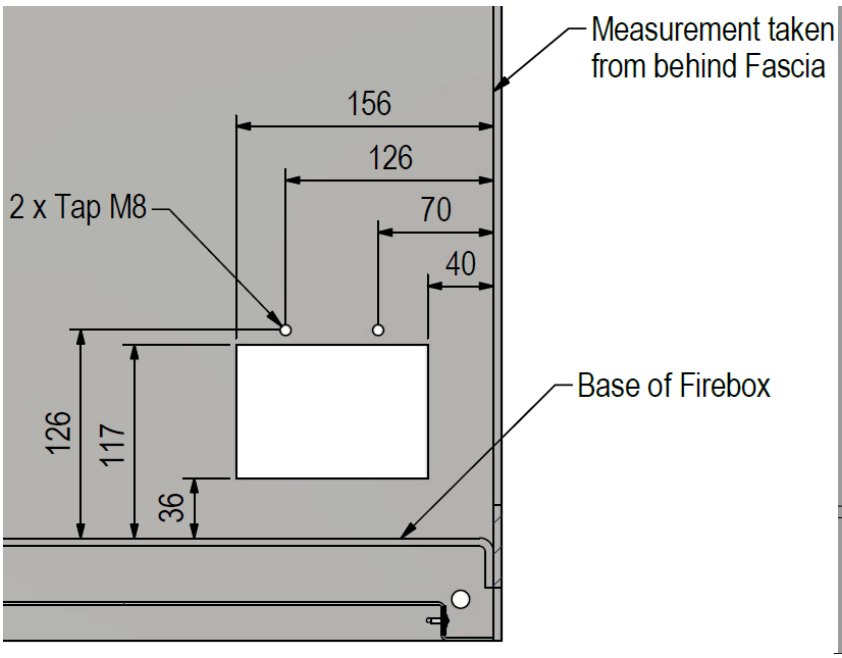

SI

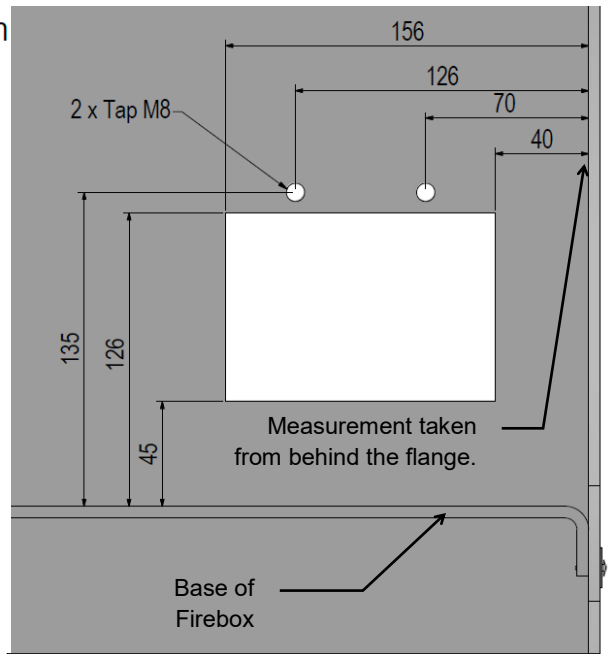

SN

SI/SN ASH PAN CUT PATTERN

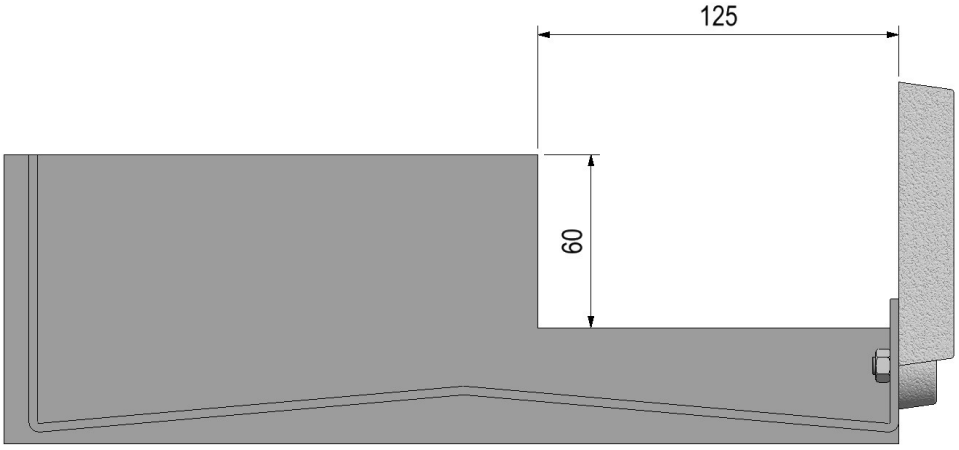

Due to continued product improvement, Warmington Ind LTD reserves the right to change product specifications without prior notification.

All dimensions are in mm

OPTION 1C: SI/SN TEE BAR RAIL BURNER

There is one size tee bar rail burner for SI and SN fires. They can be installed into fires of the 900 size and larger. For servicing, remove the two cover plates (each of which are bolted on to the main housing with 3x M8 screws).

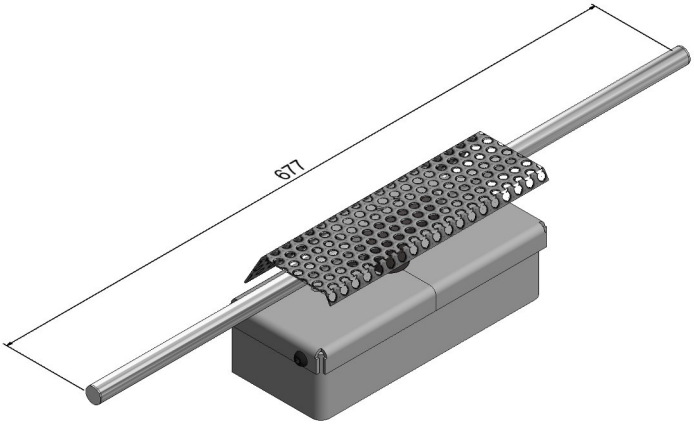

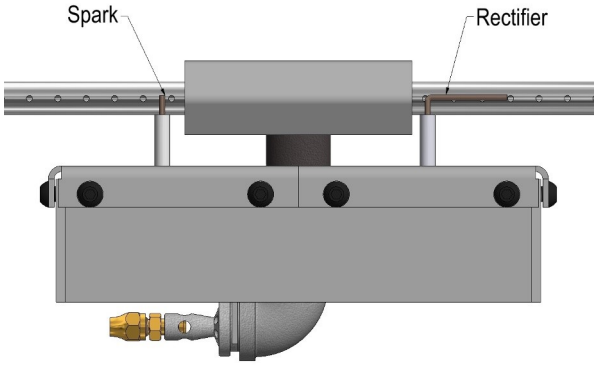

Note:
View of probes is without perf cap. Spark and rectifier may be on opposite sides as to what is shown here, however the rectifier probe will always be the longer of the two.

PREPARATION AND INSTALLATION

For new installations, the burner head will come pre-mounted in the firebox. Route the gas and electrical feeds. There are rectangular boxes on the underside of the firebox to route the feeds through, and pre-cut holes (with grommets) on the sides of the firebox.

Note: retrofitting a tee bar into SI or SN fires is **not** recommended, unless the fire is sent back to the Warmington factory.

OPTION 2C: TF TEE BAR RAIL BURNER

There is one size tee bar rail burner for TF fires. They can be installed into traditional fires of size 1200 and larger with tapered sides and 800 and up with straight sides. The TF tee bar is to be mounted near the back of a traditional fire, under the grate. Therefore consideration for the brick out needs to be accounted for before installing the unit. There is a removable access plate on the top of the housing for servicing.

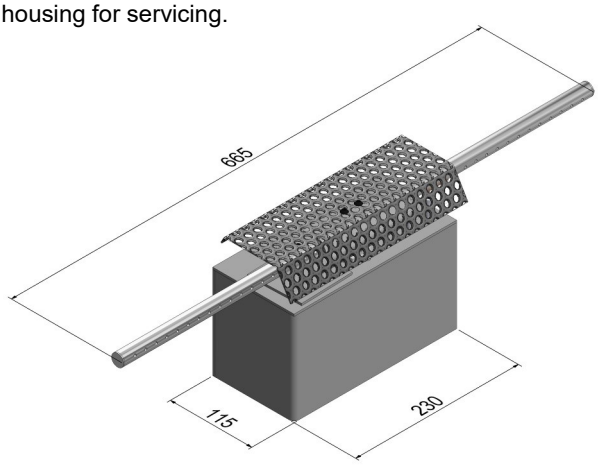

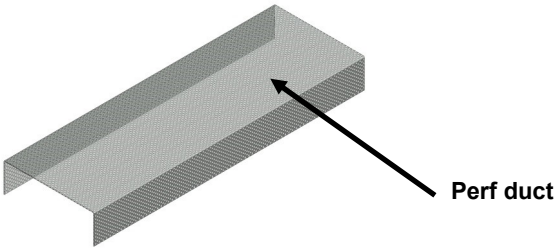

Notes:
Gas feed on Trad Tee-bar can only go straight out the back of the fireplace. Outside the fireplace the feed can go either to the right or left side. Make sure the perf duct cavity is getting air from the back of the fireplace, this might need to be drilled on site.
With the TF Tee Bar, the spark is on the same the same side as the rectifier. The rectifier probe should be on the outer side and is the longer of the two probes.

PREPARATION AND INSTALLATION

For new installations:

- Plan ahead for where the tee bar will sit in relation to the brick out (especially the wings)
- Place the tee bar in its intended location. The housing will replace one (effective) brick from the base layer of bricks. Place the provided perf duct to the back of the log lighter. The perf duct is to route the feeds to the side (under the bricks), where they can exit out the back of the fire. The perf duct should be cut to length on site.
- Connect gas feed and electrical feeds.
- Complete installation of the log lighter and test the unit for correct operation before completing the brick out of the fire.

Note: retrofitting a tee bar into TF fires is **not** recommended.

Note:
DO NOT extend HT leads

Due to continued product improvement, Warmington Ind LTD reserves the right to change product specifications without prior notification.

All dimensions are in mm

STAGE 2: INSTALLATION AND TESTING OF CONTROL SYSTEM

- All wiring to be done to diagram provided (by certified electrician).
- Keeping the HT and earth wires as short as possible as this will improve the performance of the spark. DO NOT EXTEND OR JOIN THE LEADS
- When placing HT wires through masonry, run in conduit to ensure they are free of moisture.
- Gas fitting done to diagram provided and tested (by certified craftsman gasfitter).
- Keeping the valve as close as possible to the burner is recommended as this will reduce the ignition time.

FLUED GAS APPLIANCES: All gas fires requiring Warmington flue systems shall be installed to the requirements of relevant gas standards and shall be appropriately designed and constructed to permit safe and effective use. This appliance must be flued to the outside atmosphere.

GAS TYPE: All log lighters shall operate safely on the gas type specified on the appliance and shall comply with the requirements of The Gas Act 1992.

ELECTRICAL REQUIREMENTS: All log lighter appliances are fitted with mains supplied electrical components. For use of the appliance they must comply with Electricity Regulations 1993.

ELECTRONIC CONTROL SYSTEMS: Any gas flare or rail appliance fitted with manual or programmable electronic control systems shall be tested and/or approved by a recognised person or authority.

SEISMIC RESTRAINT: All gas flares or rails used for domestic and commercial purposes shall be firmly secured (unless defined as portable or mobile) to prevent dislodgement from their point of fixture or installation. Such restraint must be of a reasonable expectation.

GAS CONNECTION: A gas certificate must be obtained for the installation and commissioning of this appliance and flue system. Check that the gas type specified on the data plate is correct for the available supply (LPG or NG).

POSITIONING THE CONTROL BOX

- Position the control box in a dry place where it can be accessed easily for servicing and adjusting the pressure or timer settings.
- Control box to be placed no closer than 500mm to the burner head
- The control box can be screwed or bolted in place

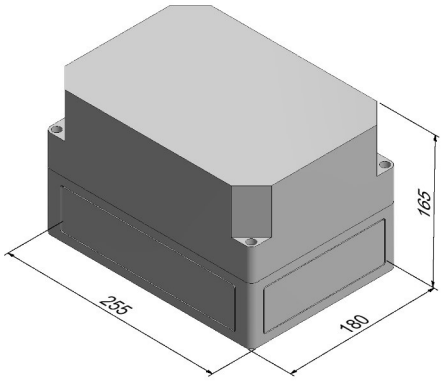

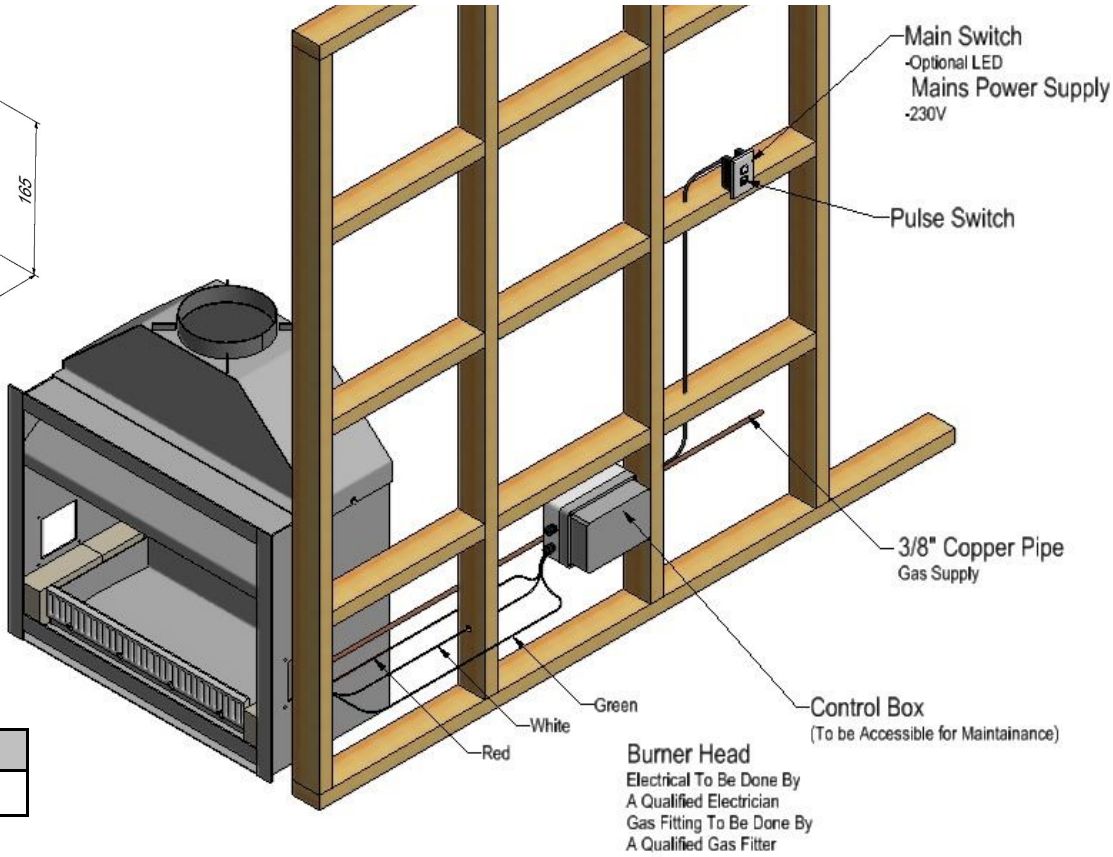

Note:
DO NOT extend HT leads

Due to continued product improvement, Warmington Ind LTD reserves the right to change product specifications without prior notification.

All dimensions are in mm

SETTING THE CONTROL VALVE

Gas Specification:				
LPG	**SI/SN and TF Flare**	**600 Rail Burner**	**800 Rail Burner**	**SISN Tee Bar**
Minimum supply pressure (kPa)	2.75	2.75	2.75	2.75
Burner pressure (kPa)	1.5	2.5	2.5	2.5
MJ/h	21	35	44	41
Jet diameter (mm)	1.3	1.7	1.9	1.8
Supply pipe size dia (min)	3/8”	3/8”	3/8”	3/8”
Pipe outlet size	1/4”	3/8”	3/8”	1/4”
Natural Gas				
Minimum supply pressure (kPa)	1.5	1.5	1.5	1.5
Burner pressure (kPa)	1.35	1.5	1.5	1.5
MJ/h	19	31	41	37
Jet diameter (mm)	1.8	2.2	2.5	2.5
Supply pipe size dia (min)	3/8”	3/8”	3/8”	3/8”
Pipe outlet size	1/4”	3/8”	3/8”	1/4”

Note: Any pressure setting is to be carried out by a certified gasfitter. Pressure settings are calibrated upon manufacture but may need to be adjusted on site.

1. Ensure gas supply and power supply to the unit
2. Loosen jet test point on the 840 control valve and attach manometer.
3. Light the appliance and check pressure.
4. Set the pressure to the ‘burner pressure’ value from the gas specification table. (Note: the settings should also be on the data plate which is attached to the outside of the control box). The pressure adjustment screw is on the front side of the gas control valve. Increase the outlet pressure by turning the screw clockwise, or anticlockwise to decrease the outlet pressure.

SIT 840 Control Valve

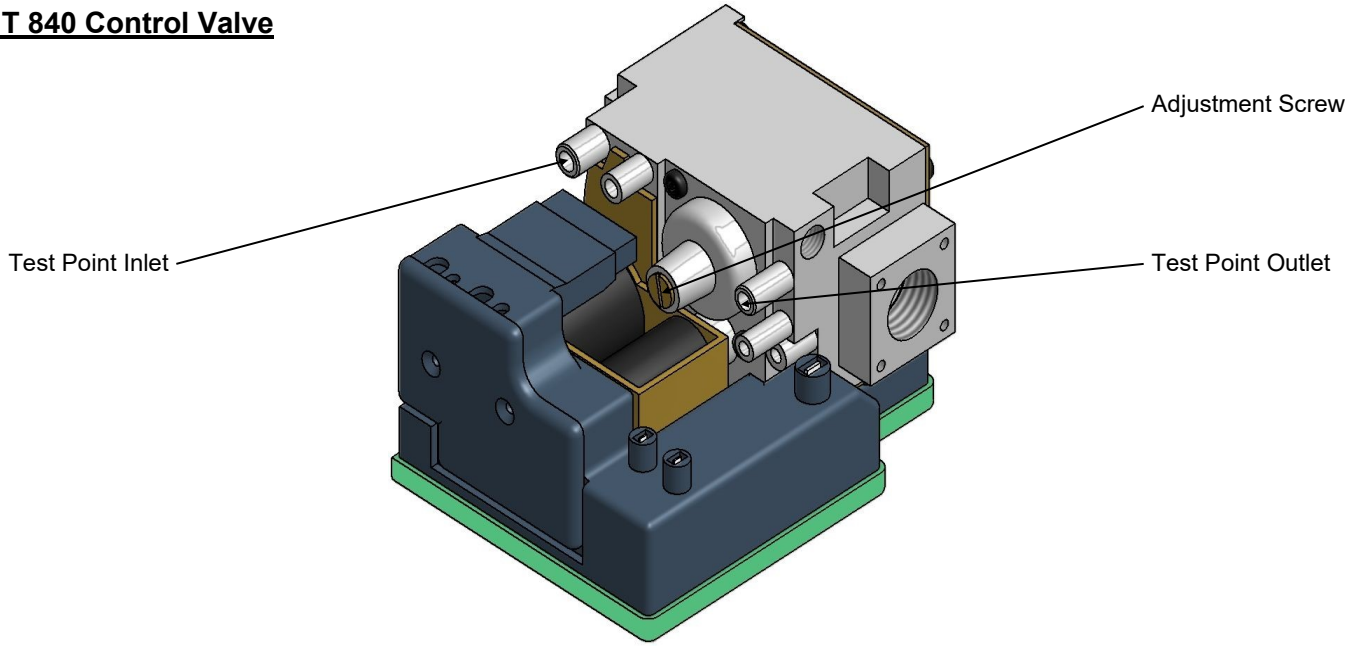

5. After checking/ adjusting the pressure, turn the unit off, remove manometer from the test point and tighten the test point screw. Ensure to check for gas leaks.
6. Turn the appliance on and off a few times to check ignition.
7. When you are satisfied that the appliance is working correctly, fit all the covers to the unit.
8. If you are unable to get the unit to operate correctly, refer to troubleshooting before contacting your local Warmington agent.
9. During the initial burning in period, some smoke and smell may be experienced. The appliance should be run in a well ventilated room until these dissipate.

Note: All burner aerations are factory set and cannot be adjusted.

WIRING DIAGRAM

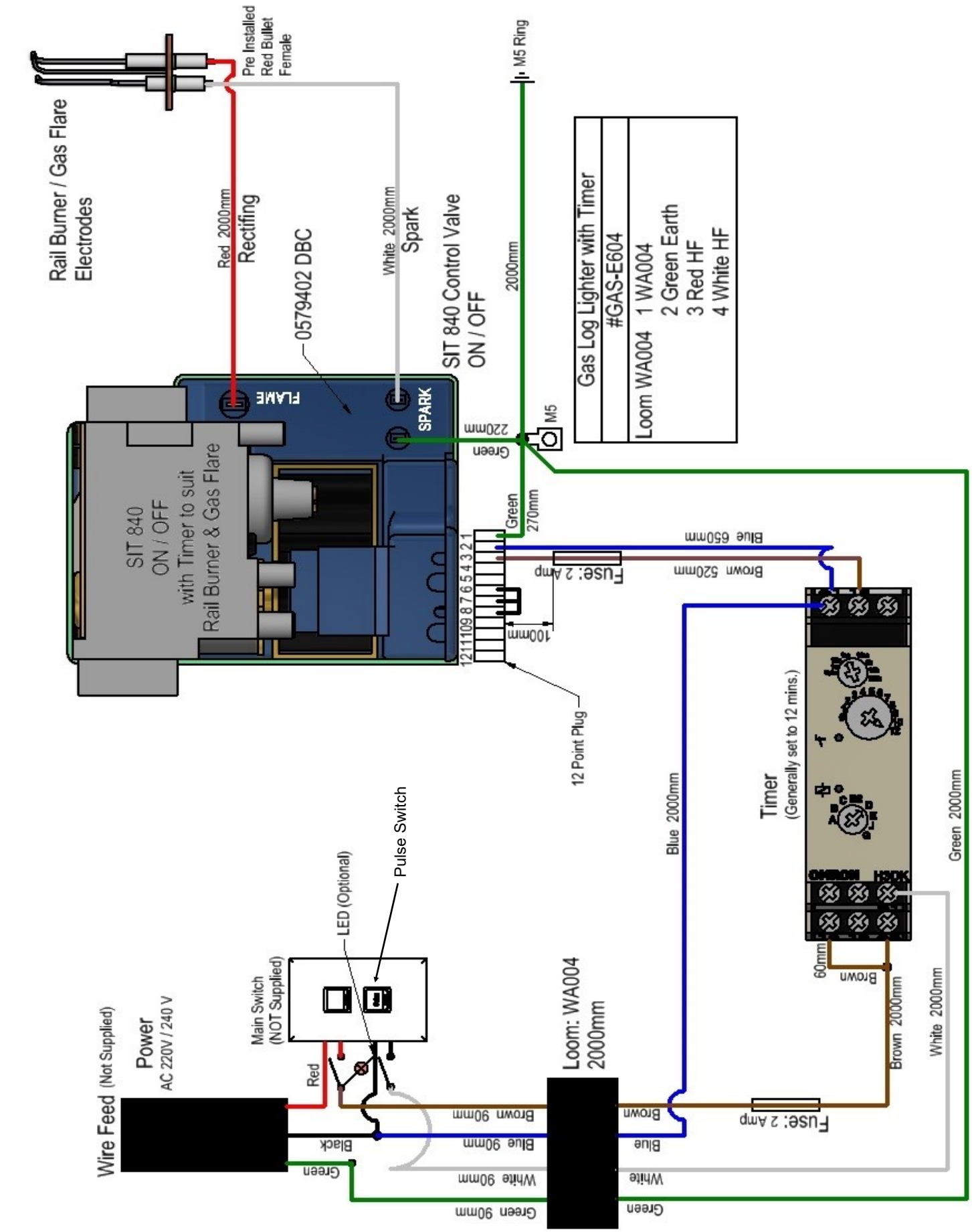

Due to continued product improvement, Warmington Ind LTD reserves the right to change product specifications without prior notification.

All dimensions are in mm

NORMAL CONTROL SYSTEM OPERATION

A flame will conduct direct current (DC) through itself. Alternating current (AC) is supplied to the electrode, usually called a flame rod, which is in contact with the flame. The flame conducts only the DC to the earthed burner, thus partially rectifying the current. This partial rectification of the AC to DC creates a specific current wavelength, which is monitored by the control unit.

Only flame rectification produces the correct current wavelength. If the flame fails, or if there is any electrical fault or failure, the current wavelength changes and the control unit operates the gas shut-off valve or system.

TROUBLESHOOTING

Scenario 1: The pulse switch (at the wall) is depressed but no spark at the electrode

- Check that the earth wire is connected
- Check the main power is turned on
- Ensure correct wiring according to wiring diagram (wiring to switches/ electrodes) on page 10 of this document
- Ensure the gap between the electrode and the earth is approx. 6mm
- Check that the ceramic insulator on the electrode is not cracked (if so contact Warmington Auckland office for replacement)
- Check the spark electrode is not coated by soot or dust
- Check the spark electrode is not burnt out/ melted (contact Warmington Auckland office for replacement)

Scenario 2: The unit is sparking but failing to light

- Verify that the gas supply to the unit is turned on
- Check that the solenoid valve is operating correctly
- Ensure that the electrical wiring to solenoid is correct
- Ensure correct jet for gas supply (LPG/ NG)
- Ensure all wiring and electronics are in a moisture free environment

Scenario 3: The unit lights but goes out after a short time

- Check the flame rod is in the flame path
- Check the setting of the timer in the control box. Normal timer setting is 12 minutes.
- Ensure burner head, control box and wiring are dry and not installed where moisture could build up or affect the electronics.

Scenario 4: The flame burns well away from the burner head

- Check the correct jet for the gas supply (LPG/NG)
- Check the gas pressure

Scenario 5: The flame burns sooty

- Check that the aeration setting to the unit is correct. There is a cast fitting that ensures aeration of the gas before burning. On the flares, this fitting is on the outside of the unit (under the perf). On the rail burners and tee bars, the fitting is inside the main housing. For natural gas, this fitting should have 4 holes exposed for aeration. For LPG, 10 holes should be exposed. If a natural gas fitting has been supplied for running LPG, the flame will burn sooty. Contact the Warmington Auckland office if the fitting needs to be replaced.

Note: If unit is fitted with an LED, the LED will light up on a flame failure.
The time from starting to ignition is approx. 30 seconds.

Note:
DO NOT extend HT leads

MAINTENANCE

- Keep flare or rail clear of any ash or soot build up.
- External surfaces should be dusted with a damp, lint-free cloth when the appliance is cold.
- Warmington Industries recommend annual servicing of your gas appliances by an authorised technician ie. gasfitter or electrician.

Note: care should be taken with igniters prongs not to crack ceramics insulation (not required on some units).

GENERAL NOTES

Installation of Fireplace

Fireplace installation to comply with NZS 6501.1:2013, 3645.1 (Int):2010, 3645.2(Int): 2010, 5266:2014, 2918:2001. Flue system installation to comply with AS/NZS 2918:2001 and appropriate building codes.

The Warmington unit is to be installed by a certified Warmington installer or an approved NZHHA installation technician.

See www.homeheat.co.nz/members for a certified NZHHA SFAIT Installer in your area.

A licenced certified gas fitter and licenced electrician are required to run power and gas supplies as required to the unit and any commissioning as part of the installation process.The heater must be installed according to these instructions and in compliance with all relevant building, gas fitting, electrical and other statutory regulations.

Warranty

- Correct installation, operation and maintenance must be maintained to comply with Warmington warranty.
- For full details on product warranties, contact your local authorised Warmington retailer.

WARNINGS:

- **WARNING: THE APPLIANCE AND FLUE SYSTEM SHALL BE INSTALLED IN ACCORDANCE WITH AS/NZS 2918 AND THE APPROPRIATE REQUIREMENTS OF THE RELEVANT BUILDING CODE OR CODES**
- **WARNING: APPLIANCES INSTALLED IN ACCORDANCE WITH THIS STANDARD SHALL COMPLY WITH THE REQUIREMENTS OF AS/NZS 4013 WHERE REQUIRED BY THE REGULATORY AUTHORITY, I.E. THE APPLIANCE SHALL BE IDENTIFIABLE BY A COMPLIANCE PLATE WITH THE MARKING 'TESTED TO AS/NZS 4013'.**
- **ANY MODIFICATION OF THE APPLIANCE THAT HAS NOT BEEN APPROVED IN WRITING BY THE TESTING AUTHORITY IS CONSIDERED TO BE IN BREACH OF THE APPROVAL GRANTED FOR COMPLIANCE WITH AS/NZS 4013.**
- CAUTION: MIXING OF APPLIANCE OR FLUE-SYSTEM COMPONENTS FROM DIFFERENT SOURCES OR MODIFYING THE DIMENSIONAL SPECIFICATION OF COMPONENTS MAY RESULT IN HAZARDOUS CONDITIONS. WHERE SUCH ACTION IS CONSIDERED, THE MANUFACTURER SHOULD BE CONSULTED IN THE FIRST INSTANCE.
- CAUTION: CRACKED AND BROKEN COMPONENTS e.g. GLASS PANELS OR CERAMIC TILES, MAY RENDER THE INSTALLATION UNSAFE.

Industries 1994 LTD

PO Box 58652, Botany 2163, Auckland

Due to continued product improvement, Warmington Ind LTD reserves the right to change product specifications without prior notification.

All dimensions are in mm